HENRY SIMON
MANCHESTER 1878

# INCLITEC BRAN FINISHER
# PRESENTATION

HENRY SIMON © 2018

# PRODUCTS

Rollermill

Purifier

Wheat Debranner

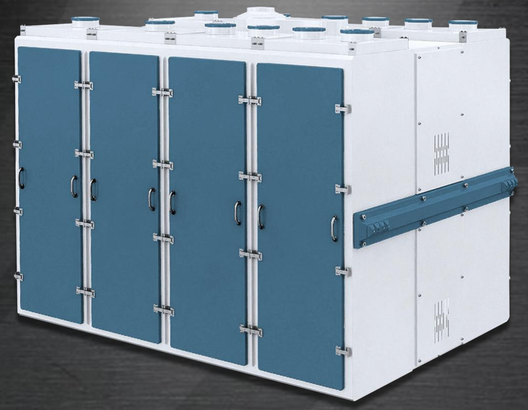

Plansifter

# THE BRAN FINISHER

## …….The Forgotten Machine

- Important machine for maximizing yield
- No significant developments in recent years
- Existing designs lack adjustment / flexibility

*Traditional Bran Finisher Design*

HENRY SIMON
MANCHESTER 1878

# THE CHALLENGES

## Most Machines Take No Account of:

- Capacity
- Wheat Type
- Ambient Conditions

Soft Wheat

Hard Wheat

HENRY SIMON
MANCHESTER 1878

# THE CHALLENGES

## Those that use complex retarders

**Difficult to Adjust**

**Time Consuming**

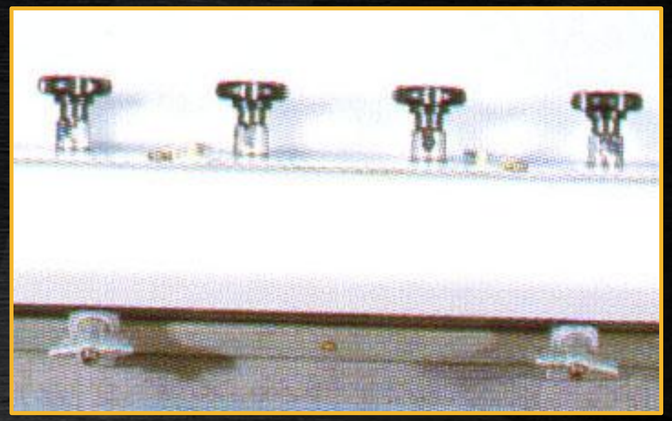

## Those that use beater clearance adjustment

**Difficult to Adjust**

**Cannot be Adjusted on the Run**

**Can Lead to Vibration Imbalance**

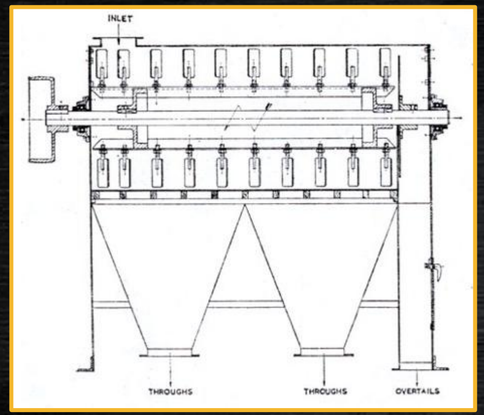


HENRY SIMON
MANCHESTER 1878

# DESIGN BRIEF

Optimise Flour Recovery

Improve Operator Controllability

Intrinsically Safe and Sanitary Design

Optimise Flour Quality

Simplify Maintenance Procedures

HENRY SIMON
MANCHESTER 1878

# THE RESULT…

## IncliTec Bran Finisher

HENRY SIMON
MANCHESTER 1878

# FEATURES

## Optimize Flour Quality and Recovery

### Conventional Rotor

HENRY SIMON
MANCHESTER 1878

# FEATURES

## Improved Rotor Design

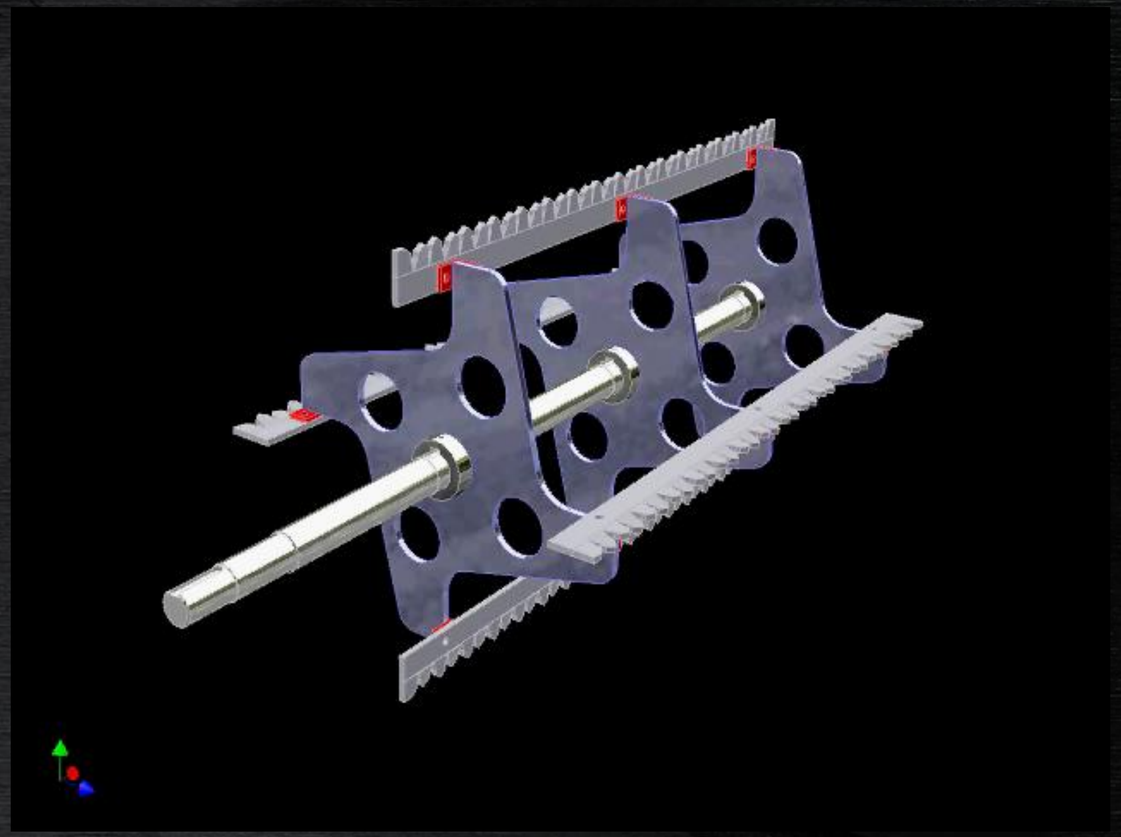

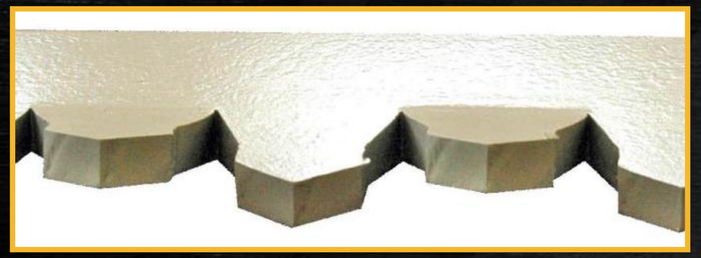

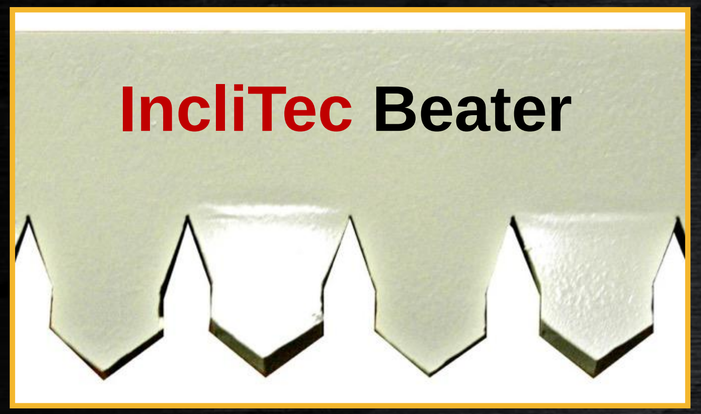


HENRY SIMON
MANCHESTER 1878

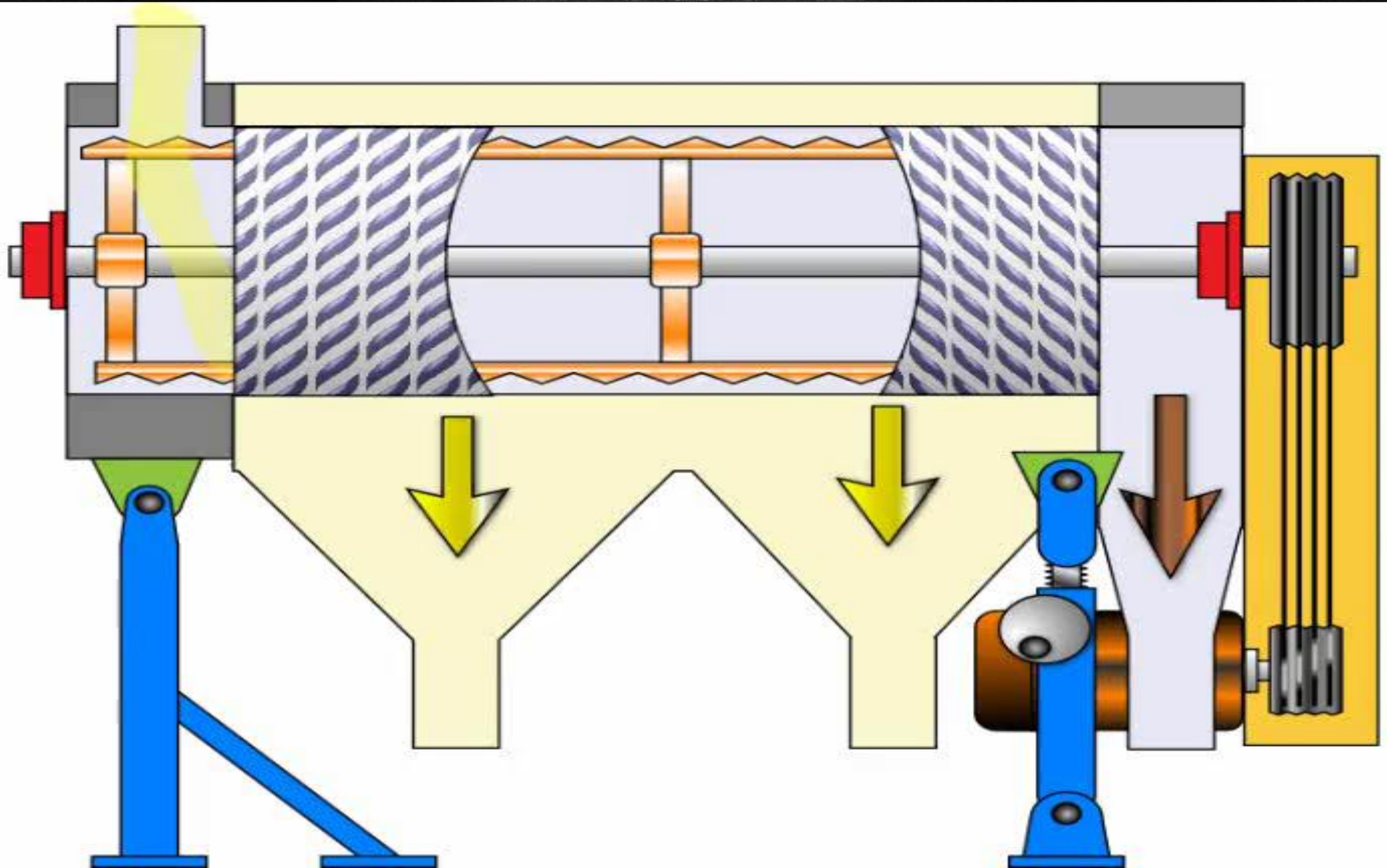

# FEATURES

## Inclination Control

### Simple Adjustment

### Repeatable Adjustment

HENRY SIMON
MANCHESTER 1878

# FEATURES

## Optimise Flour Quality and Recovery

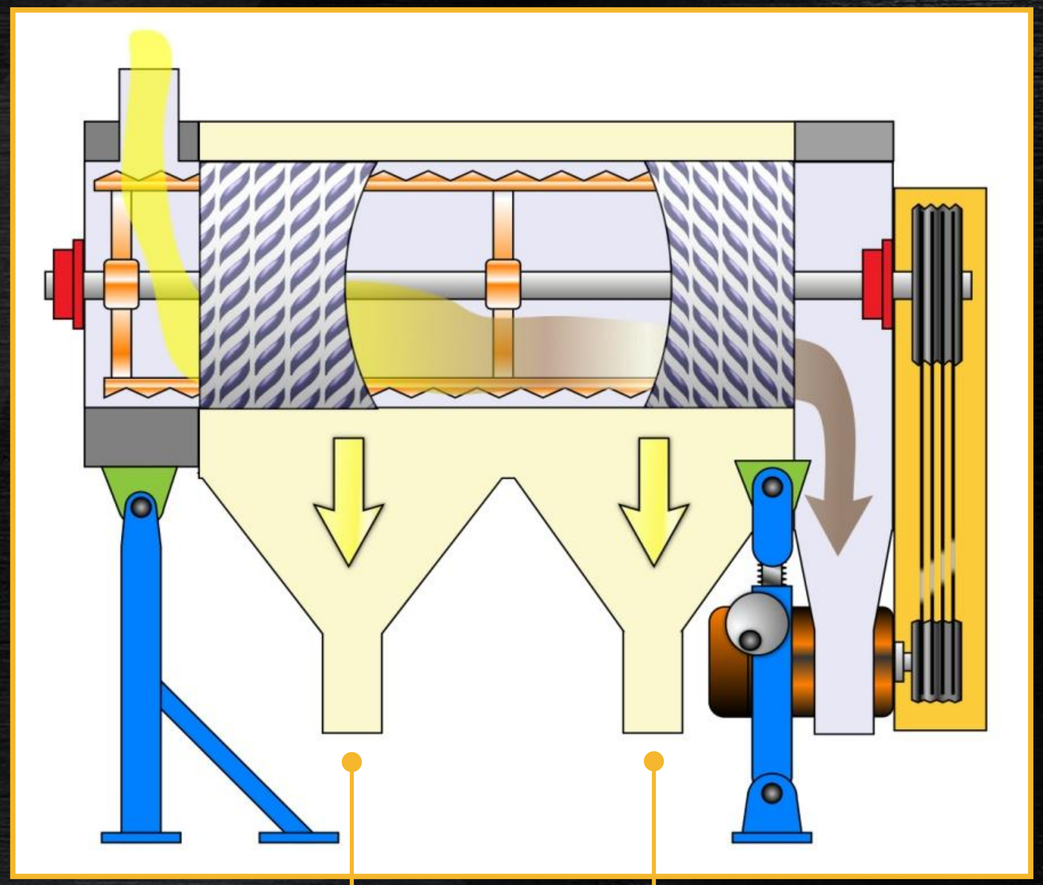

**Outlet 1**

**Outlet 2**

**Conventional Sample**

HENRY SIMON
MANCHESTER 1878

# MAINTENANCE

- Easy Access – Twin Bi-Folding Doors
- Position 1 – Lockable Inspection Access

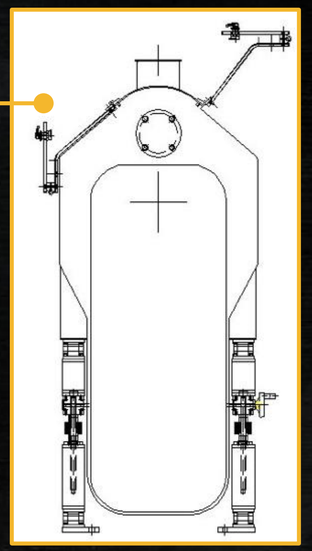

HENRY SIMON
MANCHESTER 1878

# MAINTENANCE

- Easy Access – Twin Bi-Folding Doors
- Position 2 – Access for Maintenance

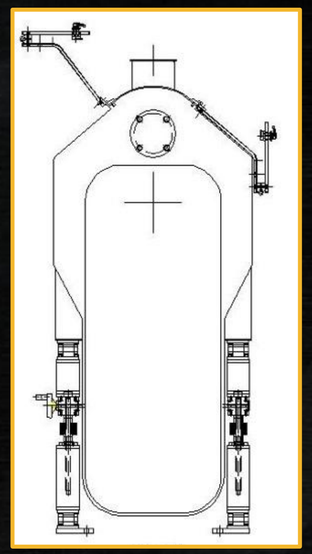

HENRY SIMON
MANCHESTER 1878

# SANITATION

- Self Cleaning
- Smooth Lines
- Minimal Ledges
- Twin Throughs Hopper

HENRY SIMON
MANCHESTER 1878

# RESULTS

## Flour Quality – Hard Wheat

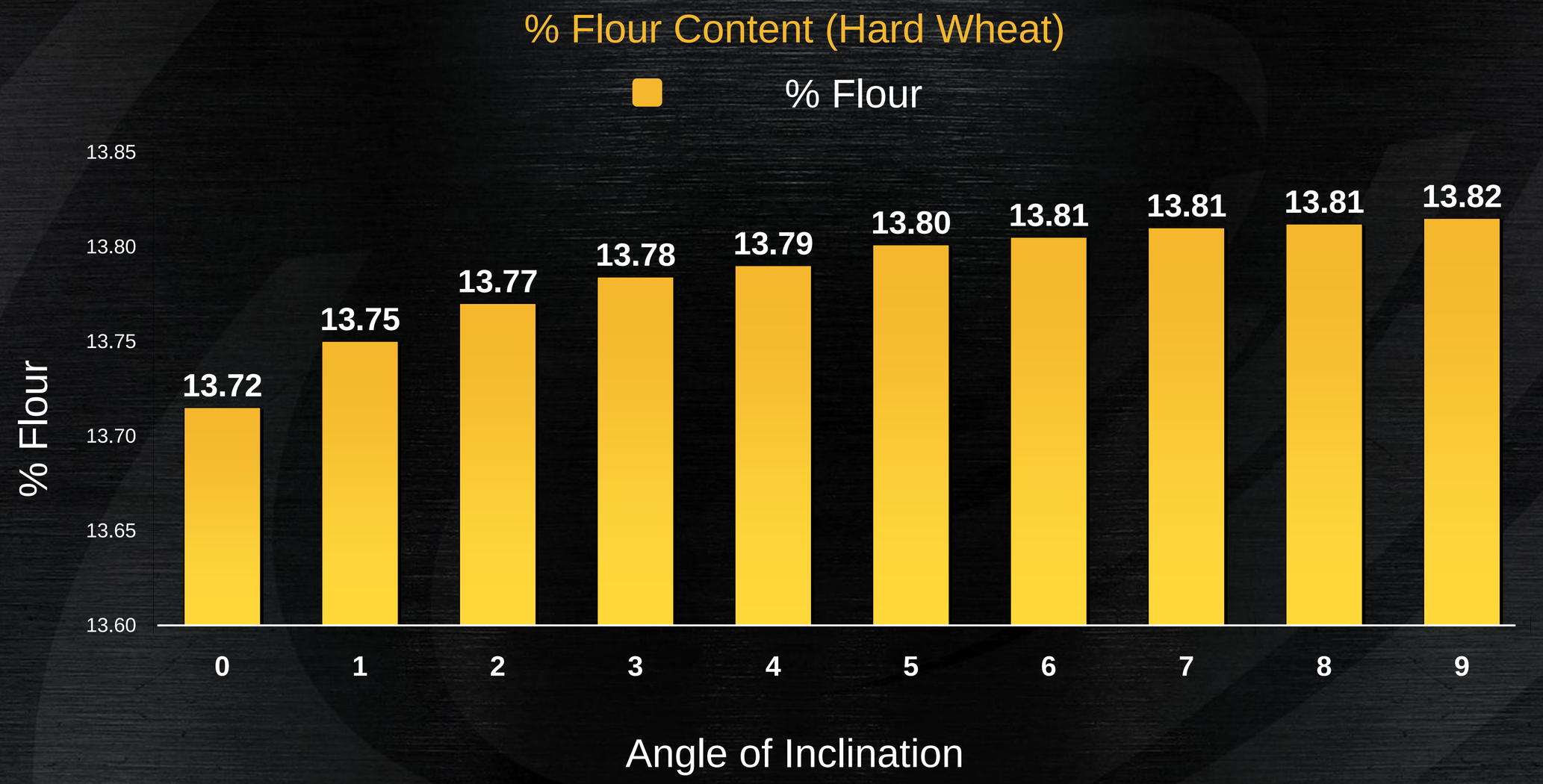


HENRY SIMON
MANCHESTER 1878

# RESULTS

## Flour Quality – Hard Wheat

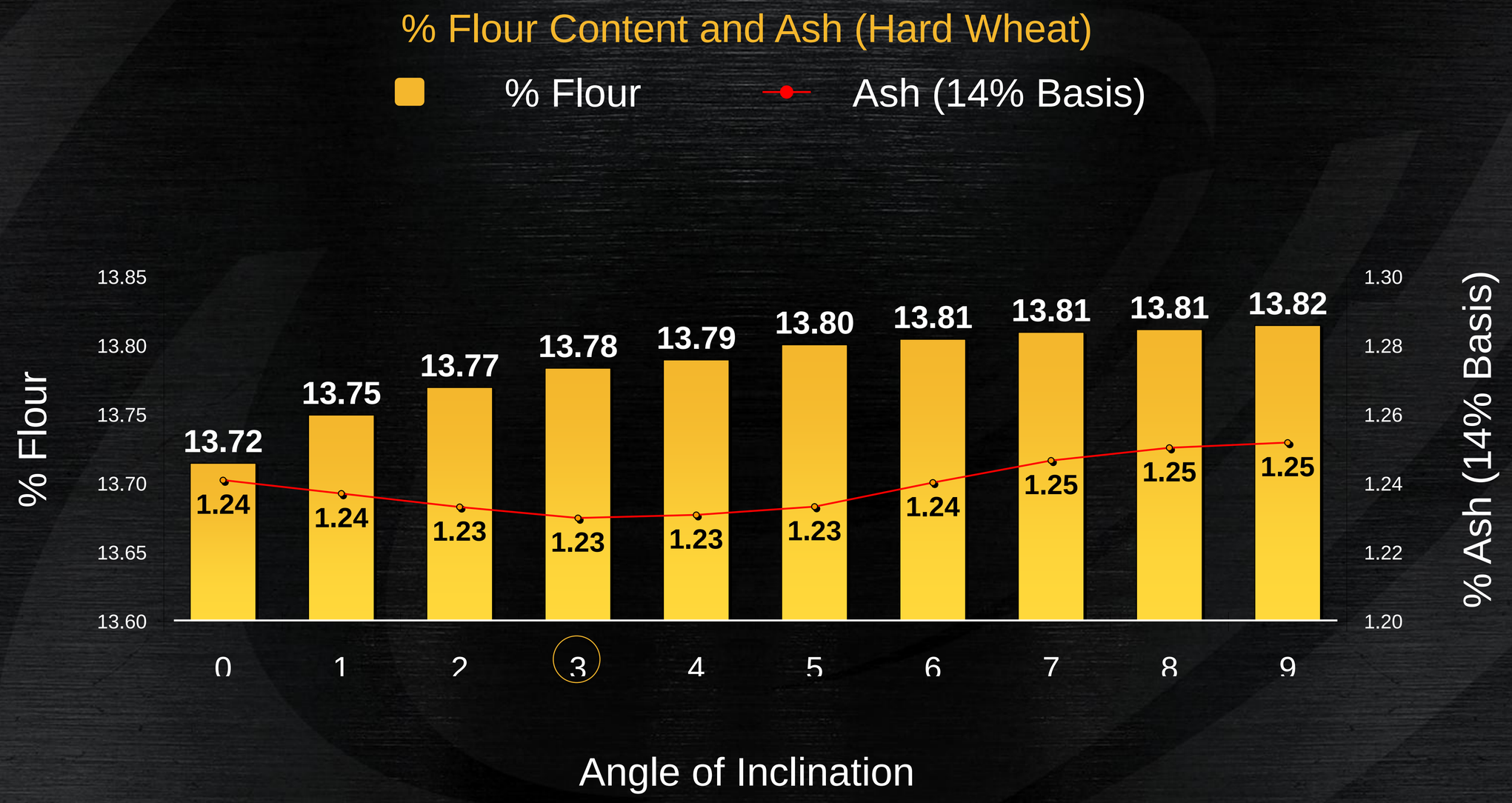


HENRY SIMON
MANCHESTER 1878

# RESULTS

## Flour Quality – Soft Wheat

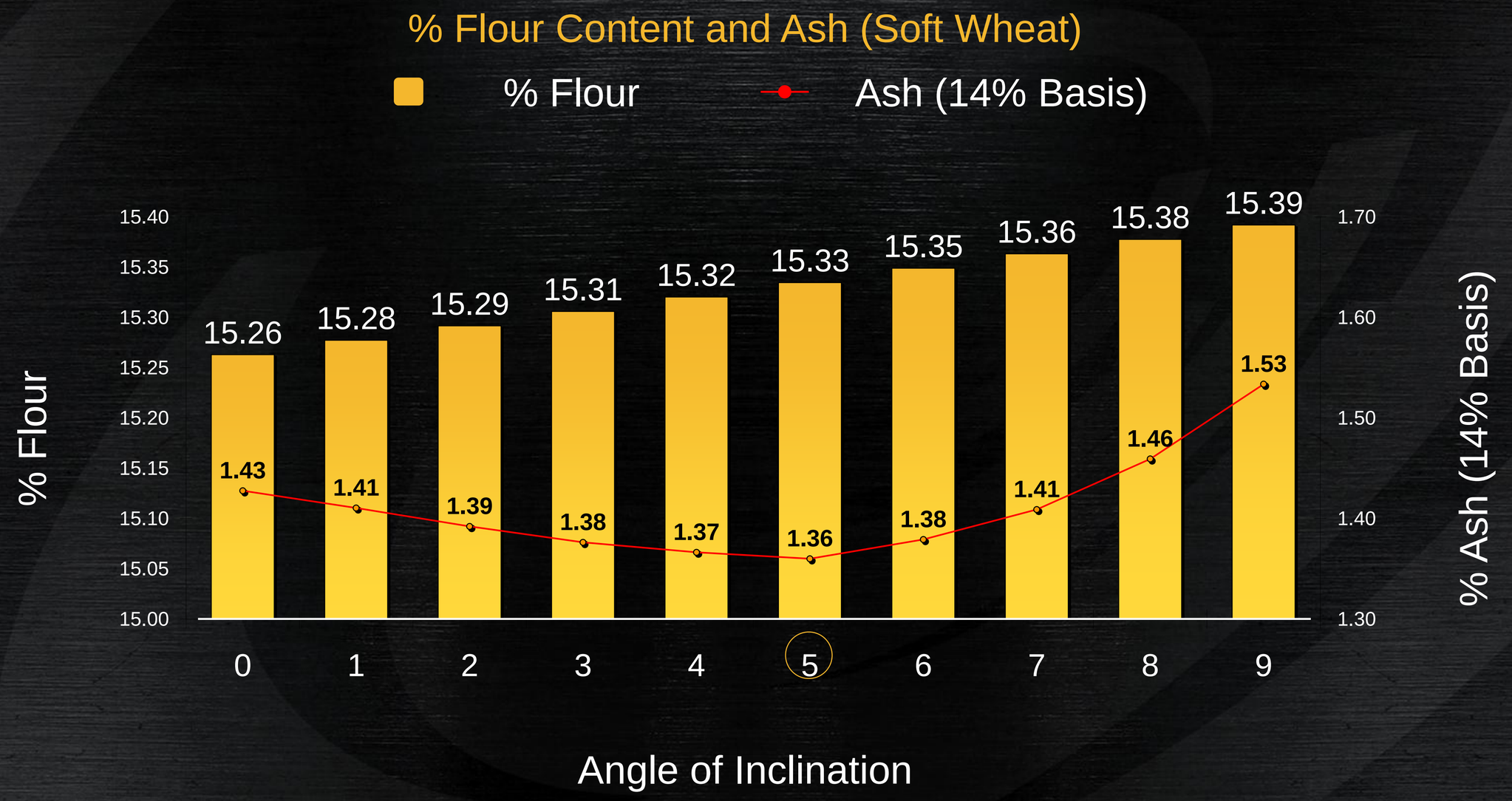


HENRY SIMON
MANCHESTER 1878

# RESULTS

## Flour Quality – Soft Wheat

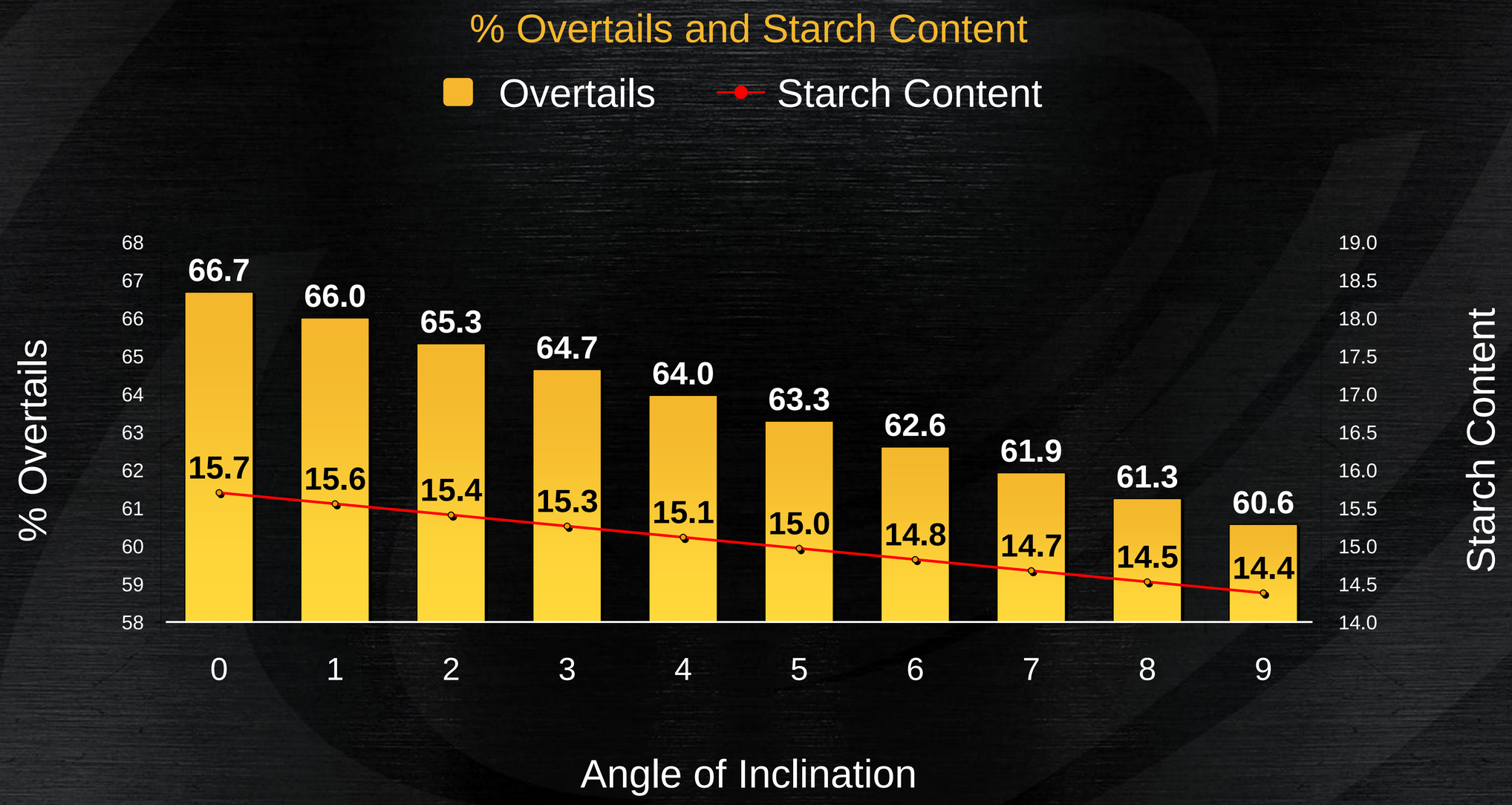


HENRY SIMON
MANCHESTER 1878

# APPLICATION

| MODEL | Capacity | |
|---|---|---|
| | lb/hr | kg/hr |
| HS BFI 75 | 4,000 | 1,800 |
| HS BFI 110 | 5,500 | 2,500 |

HENRY SIMON
MANCHESTER 1878

HENRY SIMON
MANCHESTER 1878

# THANK YOU

## FOR YOUR KIND ATTENTION